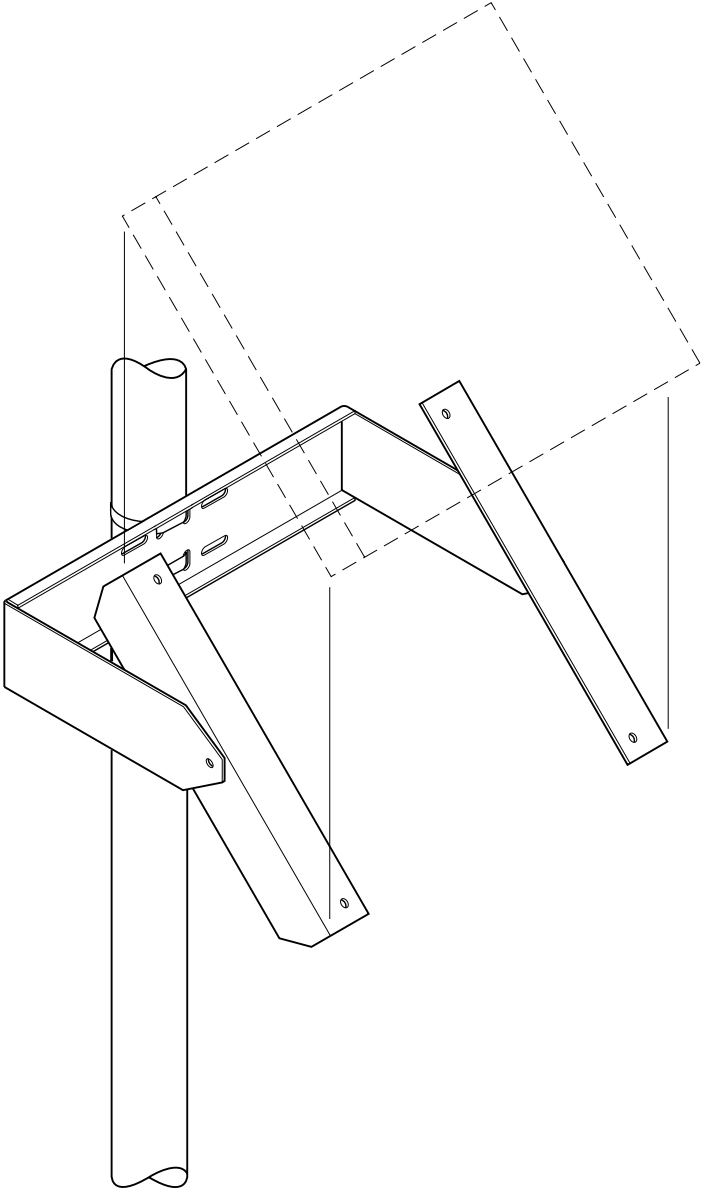

SERIES AL-1.5

Aluminum Side-of-Pole Mount for up to 1.5ft^2 of Modules

STANDARD SPECIFICATIONS

- Supplied with stainless steel band clamps for mounting to a 2”-3.5” OD pole (other sizes available)
- Available with u-bolts
- Can also be lag-bolted or through-bolted to any vertical surface
- Elevation angle adjustment: 10 to 90 degrees
- All components are mill finish 5052-H32 aluminum*
- Rack hardware is stainless steel
- Module mounting hardware is stainless steel

*other materials and finishes are available

DP&W POWER-FAB
QUALITY HARDWARE FOR THE PV INDUSTRY

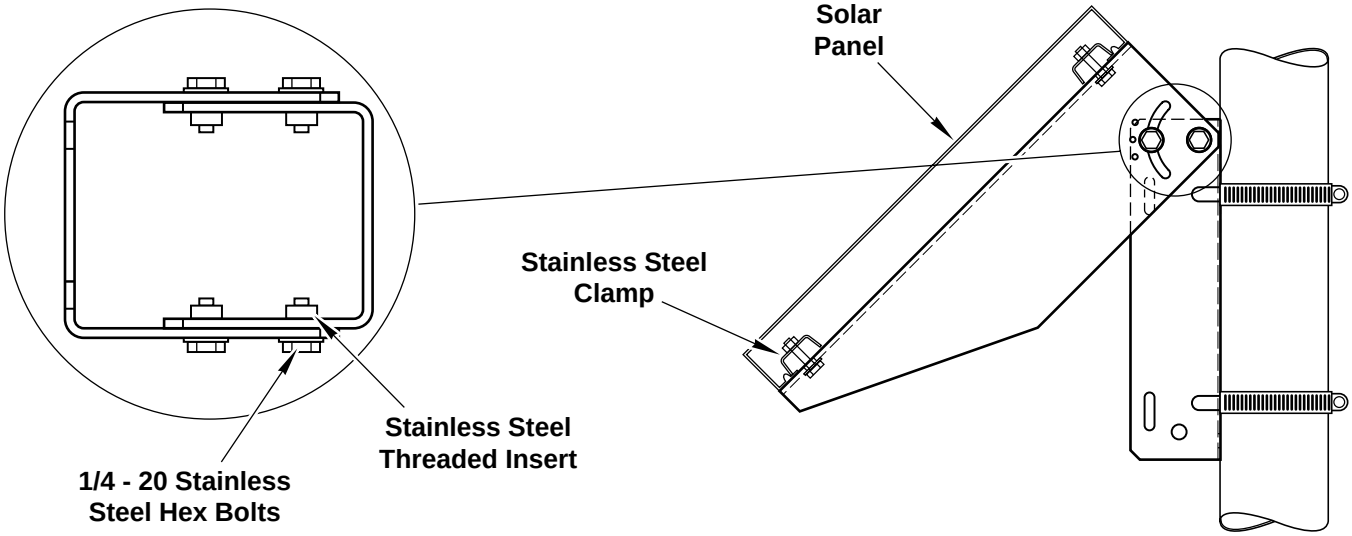

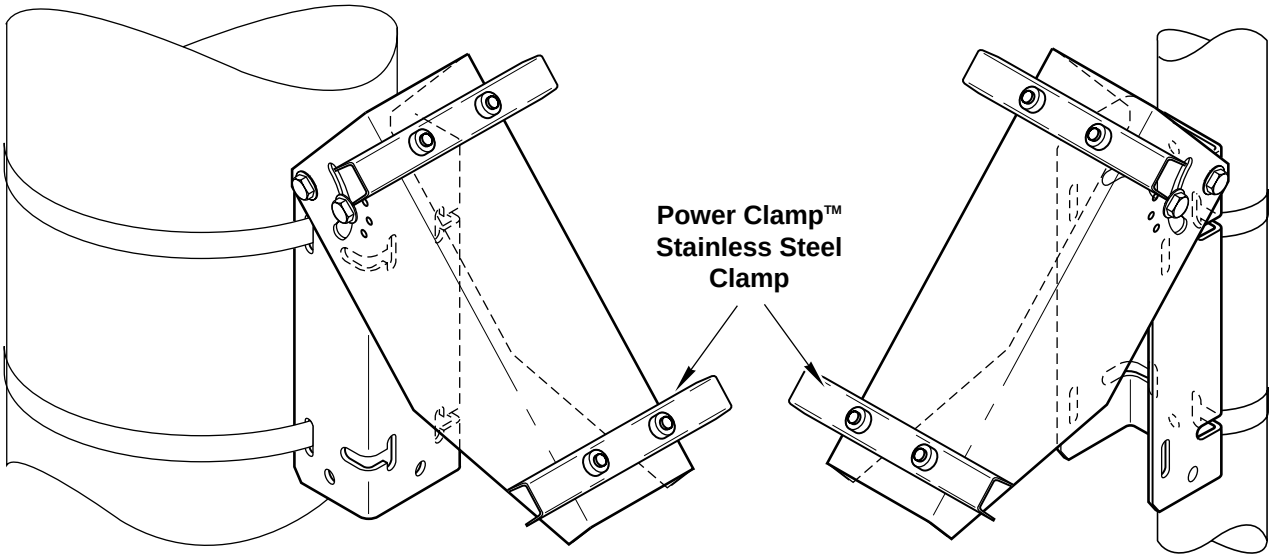

SERIES AL-5

Aluminum Side-of-Pole Mount for up to 5ft^2 of Modules

STANDARD SPECIFICATIONS

- Supplied with stainless steel band clamps for mounting to a 2”-3.5” OD pole (other sizes available)
- Available with u-bolts
- Can also be lag-bolted or through-bolted to any vertical surface
- Elevation angle adjustment: 0 to 90 degrees
- All components are mill finish 5052-H32 aluminum*
- Threaded inserts in pole clamp channel
- Rack hardware is stainless steel
- Module mounting hardware is stainless steel

*other materials and finishes are available

DP&W POWER-FAB
QUALITY HARDWARE FOR THE PV INDUSTRY

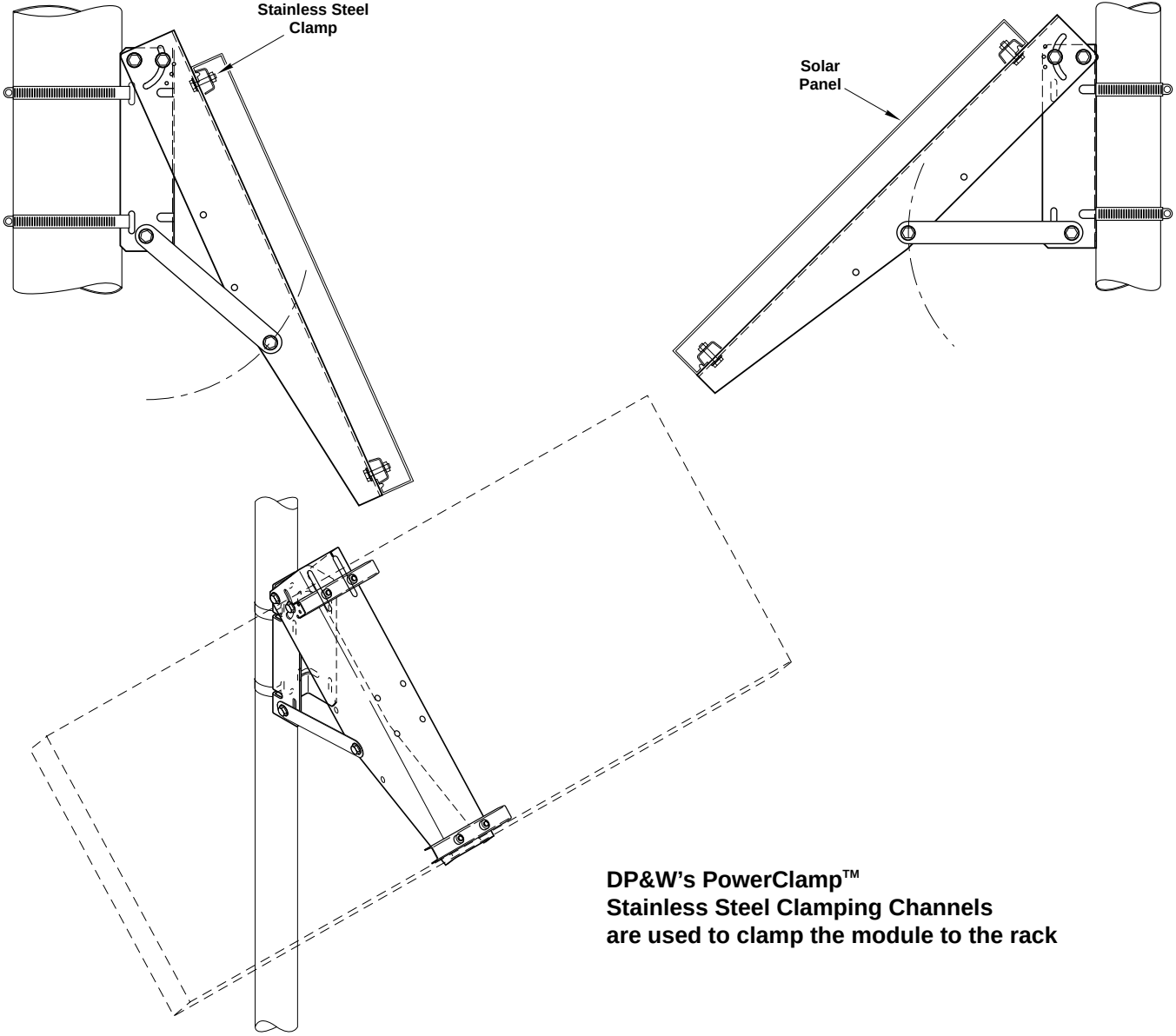

SERIES AL-7

Aluminum Side-of-Pole Mount for up to 7ft^2 of Modules

STANDARD SPECIFICATIONS

- Supplied with stainless steel band clamps for mounting to a 2”-3.5” OD pole (other sizes available)
- Can be attached to poles with u-bolts
- Can also be lag-bolted or through-bolted to any vertical surface
- Elevation angle adjustment: 0 to 90 degrees
- All components are mill finish 5052-H32 aluminum*
- Threaded inserts in pole cclamp channel
- Rack hardware is stainless steel
- Module mounting hardware is stainless steel

*other materials and finishes are available

DP&W POWER-FAB
QUALITY HARDWARE FOR THE PV INDUSTRY

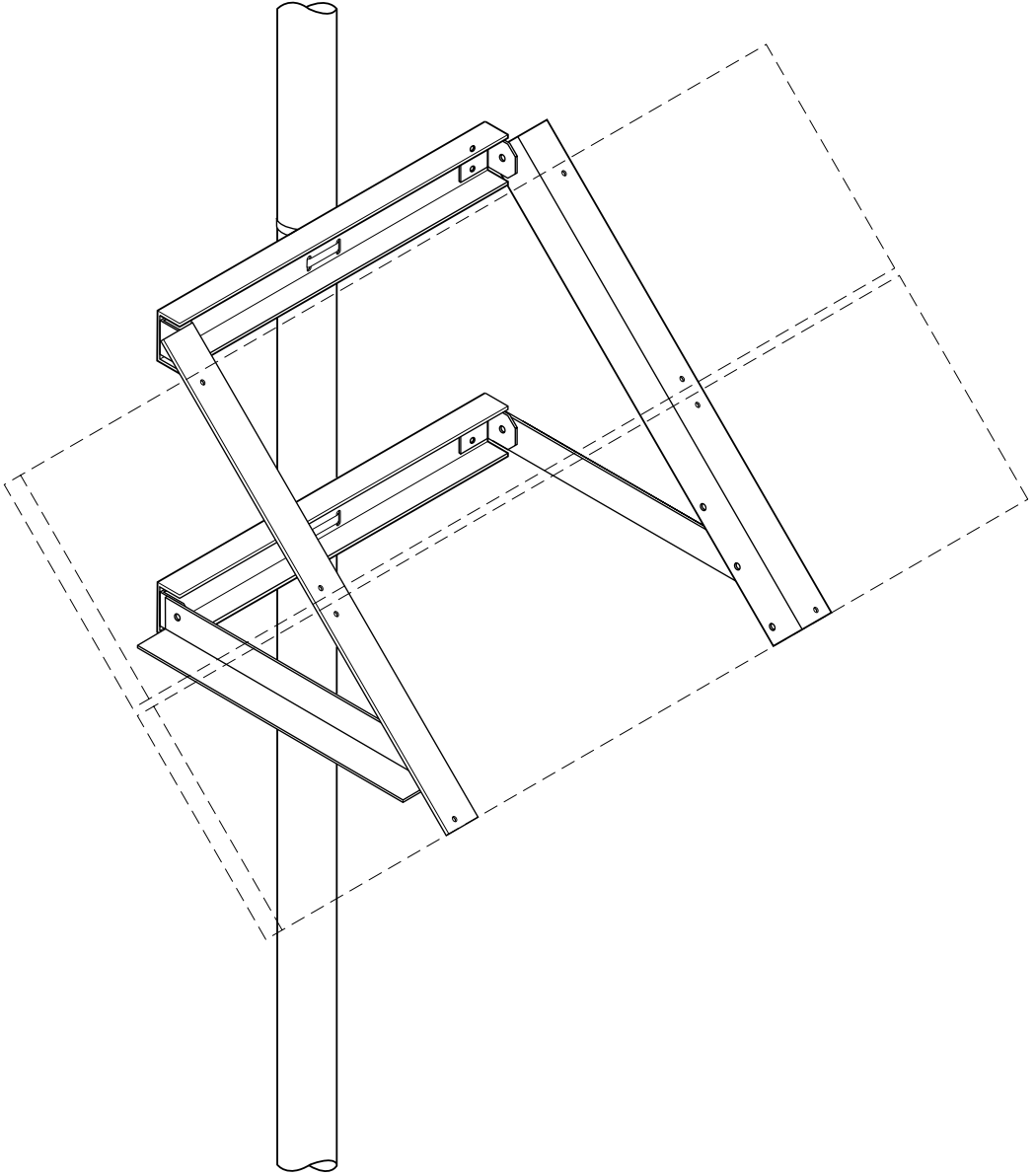

SERIES AL-14

~~Aluminum Side-of~~-Pole Mount for up to 14ft^2 of Modules

STANDARD SPECIFICATIONS

- Supplied with stainless steel band clamps for mounting to a 2”-3.5” OD pole (other sizes available)
- Can also be lag-bolted or through-bolted to any vertical surface
- Elevation angle adjustment: 30 to 60 degrees in 5-degree increments
- All components are mill finish 6061-T6 structural aluminum*
- Rack hardware is stainless steel
- Module mounting hardware is stainless steel

*other materials and finishes are available

DP&W POWER-FAB
QUALITY HARDWARE FOR THE PV INDUSTRY

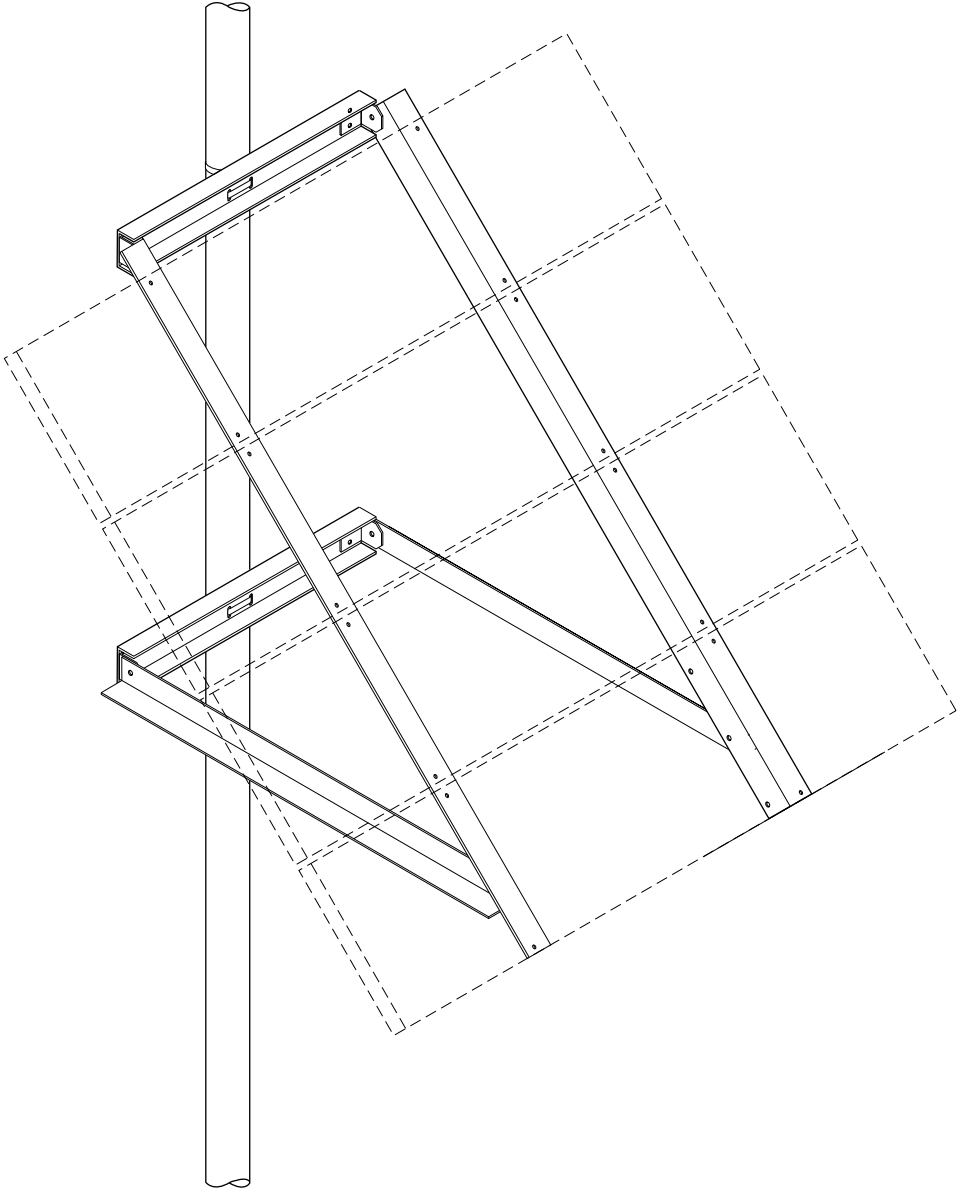

SERIES AL-22

Aluminum Side-of-Pole Mount for up to 22 ft of Modules

STANDARD SPECIFICATIONS

- Supplied with stainless steel band clamps for mounting to a 2”-3.5” OD pole (other sizes available)
- Can be attached to poles with u-bolts
- Can also be lag-bolted or through-bolted to any vertical surface
- Elevation angle adjustment: 30 to 60 degrees in 5-degree increments
- All components are mill finish 6061-T6 structural aluminum*
- Rack hardware is stainless steel
- Module mounting hardware is stainless steel

*other materials and finishes are available

DP&W POWER-FAB
QUALITY HARDWARE FOR THE PV INDUSTRY

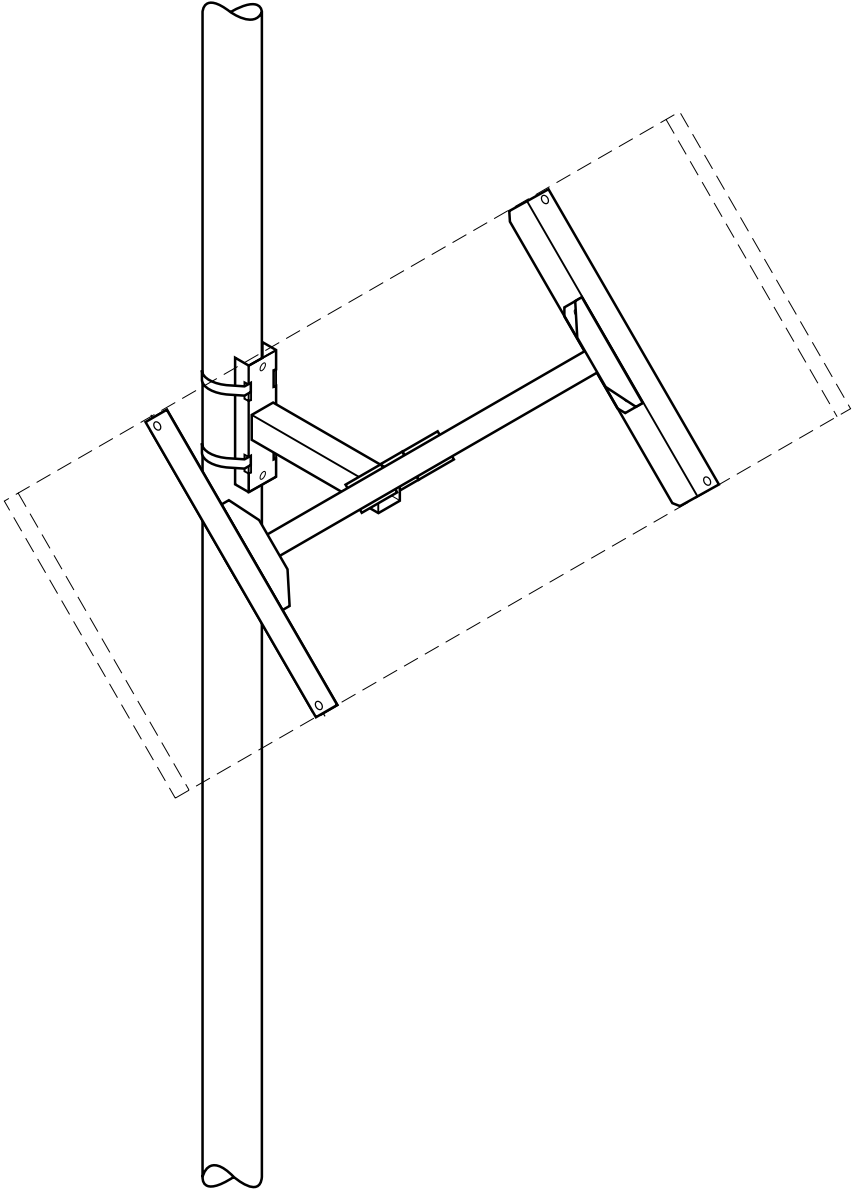

SERIES PS-8

Side-of-Pole Mount for up to 8ft² of Modules

STANDARD SPECIFICATIONS

- Supplied with stainless steel band clamps for mounting to a 2”-3.5” OD pole (other sizes available)
- Can also be lag-bolted or through-bolted to any vertical surface
- Elevation angle adjustment: 0 to 90 degrees
- Pole clamps, strongback and support arm are painted heavy gauge steel*
- Module rails are mill finish 6061-T6 structural aluminum angle*
- Rack hardware is zinc-plated grade 5
- Module mounting hardware is stainless steel

*other materials and finishes are available

DP&W POWER-FAB
QUALITY HARDWARE FOR THE PV INDUSTRY

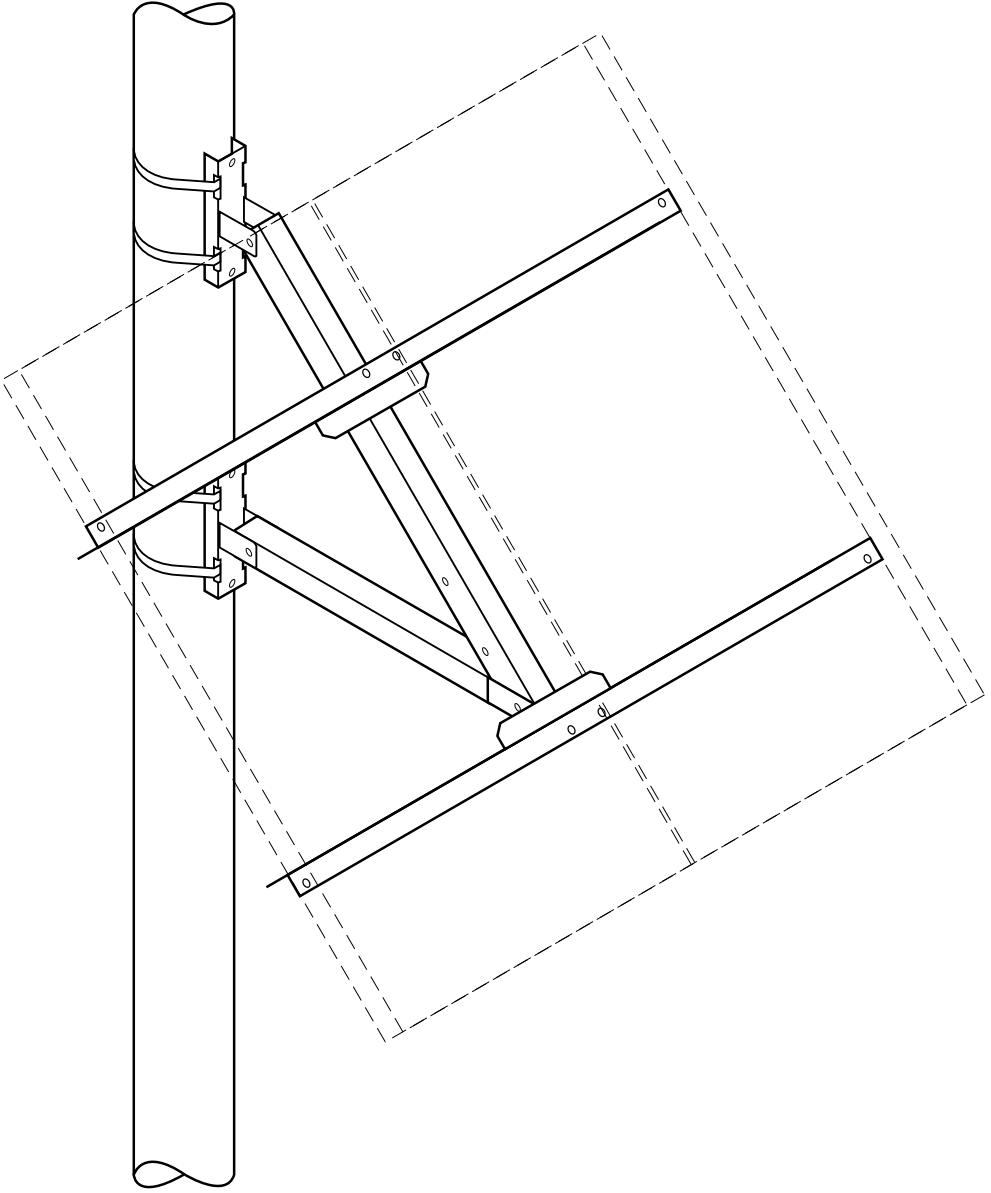

SERIES PS-19

Side-of-Pole Mount for up to 19ft^2 of Modules

STANDARD SPECIFICATIONS

- Supplied with stainless steel band clamps for mounting to a 2”-3.5” OD pole (other sizes available)
- Can also be lag-bolted or through-bolted to any vertical surface
- Elevation angle adjustment: 25 to 65 degrees in 5-degree increments
- Pole clamps, strongback and support arm are painted heavy gauge steel*
- Module rails are mill finish 6061-T6 structural aluminum angle*
- Rack hardware is zinc-plated grade 5
- Module mounting hardware is stainless steel

*other materials and finishes are available

DP&W POWER-FAB
QUALITY HARDWARE FOR THE PV INDUSTRY

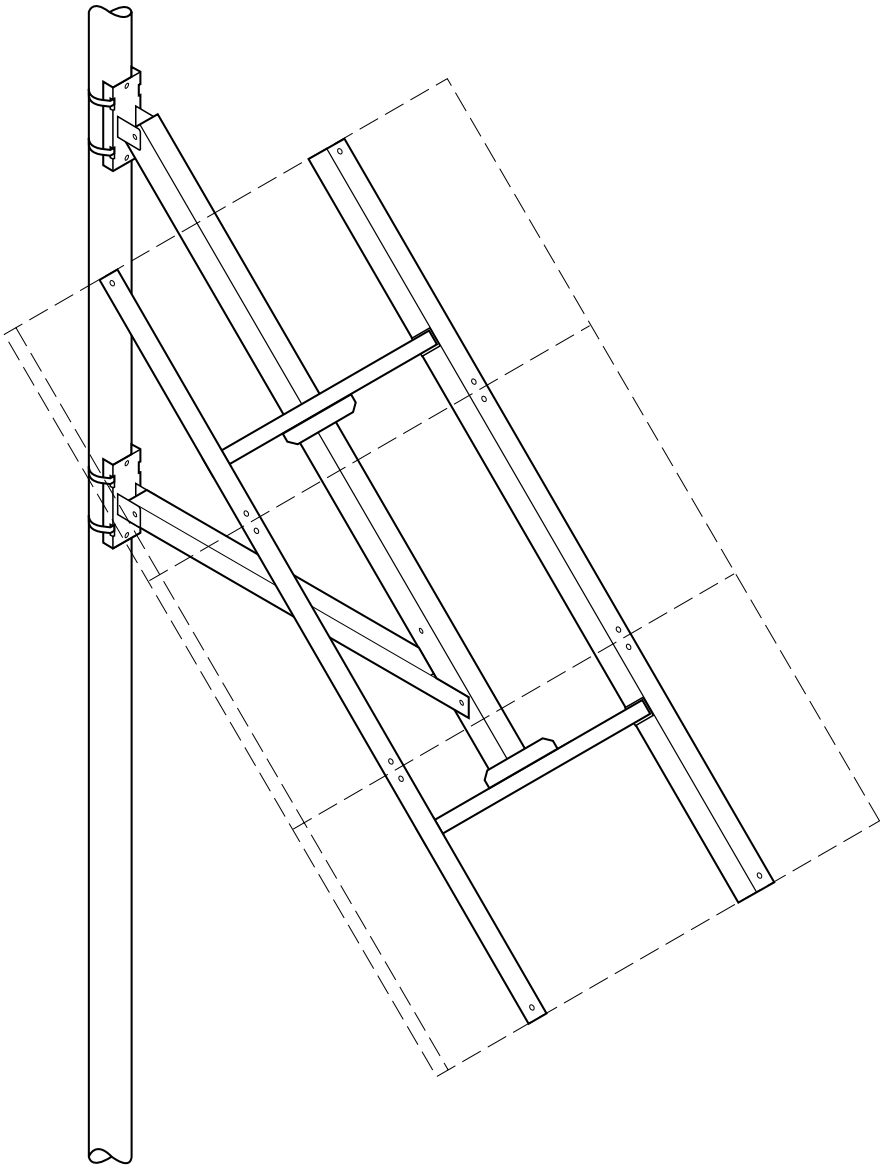

SERIES PS-28

Side-of-Pole Mount for up to 28ft^2 of Modules

STANDARD SPECIFICATIONS

- Supplied with stainless steel band clamps for mounting to a 3”-4.5” OD pole (other sizes available)
- Can also be lag-bolted or through-bolted to any vertical surface
- Elevation angle adjustment: 25 to 65 degrees in 5-degree increments
- Pole clamps, strongback and support arm are painted heavy gauge steel*
- Module rails are mill finish 6061-T6 structural aluminum angle*
- Rack hardware is zinc-plated grade 5
- Module mounting hardware is stainless steel

*other materials and finishes are available

DP&W POWER-FAB
QUALITY HARDWARE FOR THE PV INDUSTRY